Quick Start Guide:

User Manual

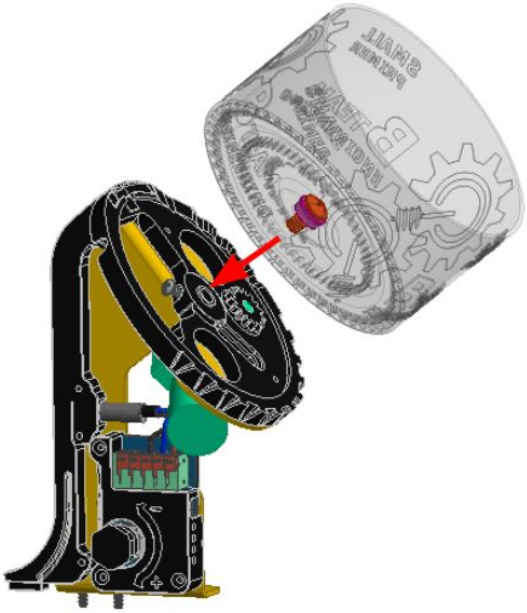

1. Attach Bowl

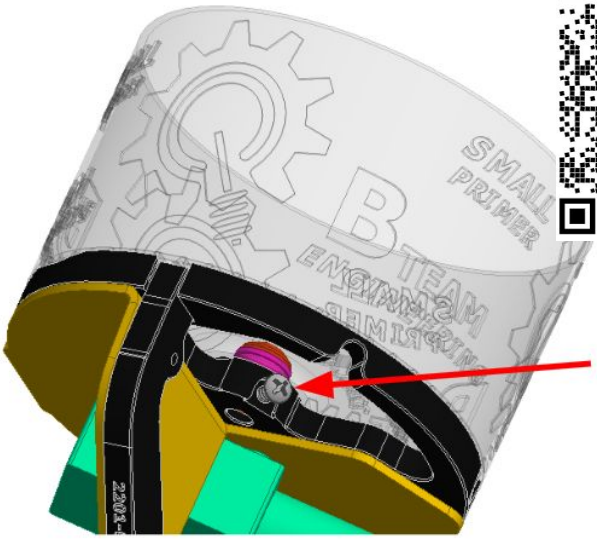

2. Tighten Grub Screw

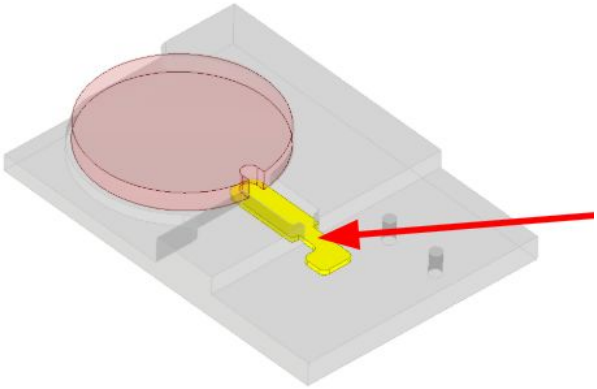

3. Remove OEM primer, install shim

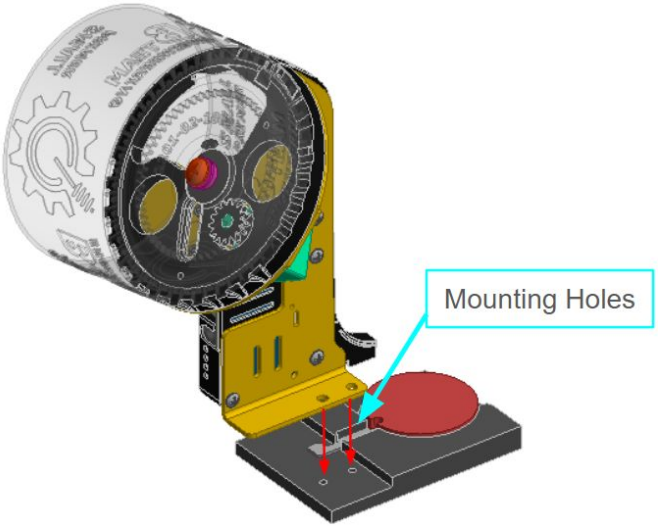

4. Install Primer Assembly

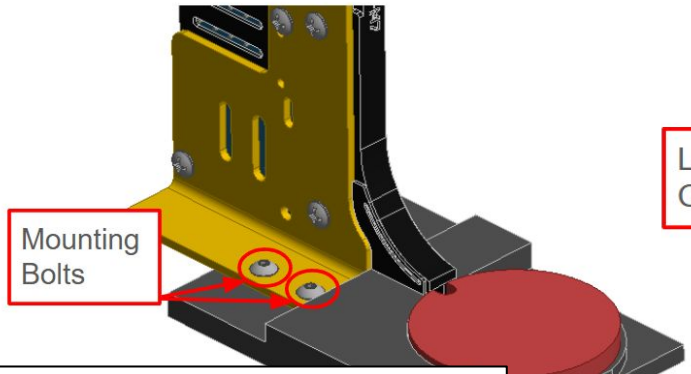

5. Tighten Bolts

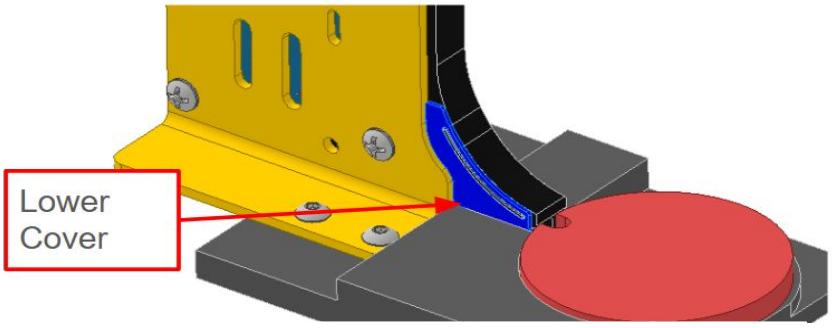

6. Install Lower Cover